• Description

This 7 Smart Sensor Module consists of a data collection and processing PCB assembly, a SemeaTech 7-Series electrochemical (EC) sensor, and a metal enclosure. The PCB assembly in the module collects the data from the gas sensor output and then processes it with amplification, sampling, filtration, and compensation through a built-in MCU to deliver stable and accurate digital output reflecting the actual target gas concentration. Any of SemeaTech 7-series EC sensors and 4-electrode EC sensors can be used to form a 7 Smart Sensor Module to detect the target gas with the digital output. This module provides the convenience and friendly user experience for users to quickly integrate gas sensors into their existing systems for a variety of gas detection applications.

- Unified electrical interface, mechanical dimensions and communication protocol;
- Working with all SemeaTech 7-series EC sensors and 4-electrode EC sensors;
- Built-in temperature and humidity sensors and integrated temperature compensation algorithm to reduce the impact of ambient temperature variations on measurement results.
- Multiple output interfaces, including USART, and I²C;
- Equipped with metal case (optional), it can protect the internal circuit from dust and water;
- Programmable I²C address for user friendly interfaces.

• Specifications

Design For:	7 smart and environmental sensors
Detection Principle:	Electrochemical
Detection Range:	Refer to sensor data sheet
Detection Resolution:	Refer to sensor data sheet
Measurement Error:	Refer to sensor data sheet
Operating Voltage:	3.2 ~ 5.5 VDC
Operating Current:	≤ 5 mA @ 5 V
Output Mode:	USART (3.3V TTL)
	I²C (3.3V TTL)
Installation:	11 pins, plug-in
Operating Temperature:	-20°C ~ 55°C
Operating Humidity:	0% ~ 90%RH non-condensing
Operating Pressure:	1 ± 0.1 atm
Enclosure Material:	Aluminum alloy
Dimensions:	Φ 33.5 x 31 mm
Weight:	30 g
Expected Operating Life:	PCBA: 5 years
	Sensor: Refer to data sheet

• Product Dimensions

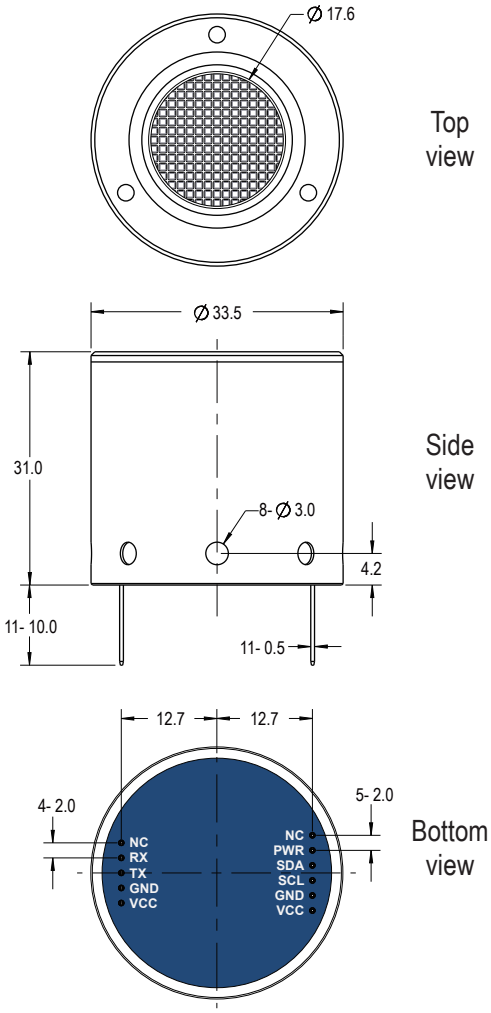

All dimensions in mm
All tolerances ±0.20mm unless otherwise stated

• Pin

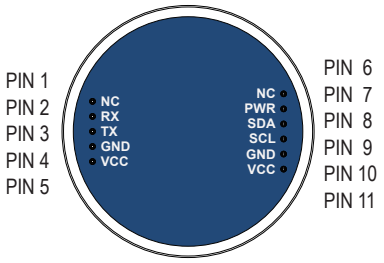

• Pin Definitions

1	NC	Reserved pins (suspended)
2	RX	Serial port receiving
3	TX	Serial port sending
4	GND	0V-Ground
5	VCC	3.2 ~ 5.5 VDC
6	NC	Reserved pins (suspended)
7	PWR	Module power enable, Default high level
8	SDA	I²C signal SDA, Default high level
9	SCL	I²C signal SCL, Default high level
10	GND	0V-Ground
11	VCC	3.2 ~ 5.5 VDC

*Note: Two VCC signals are connected internally.

• USART Communication Protocol

1. Settings

Start bit – 1 Data bit – 8 Stop bit – 1 Check bit – None Baud rate – 115,200 bps
Without special instructions, the response time is less than 100ms (please refer to the specific instructions for special circumstances). System cannot respond to other commands until the current command is answered.

2. Frame Format (The format of each communication frame)

Header	Device Code	Function Code	Starting Address	Data Length	Data	Check Bit
H	ID	F	A	N	D	CRC16

H – 1Byte, fixed as 0x3A
ID – 1Byte, defaults as 0x10 and can be customized by users
F – 1Byte, for example (0x03)
A – 2Byte, for example (0x0001)
N – 1Byte, in two bytes, for example (0x02: 4 bytes)
D – N * 2Byte, Big Endian for example (MSB LSB) is defined as signed short
CRC16 – 2Byte, using MODBUS_CRC16 checking algorithm (see Appendix 1 for details)

3. Command Description

3.1 Sensor type reading

Request from host device

Header	Device Code	Function Code	Starting Address	Data Length	Data	Check
0x3A	0x10	0x01	0x0000	0x01	0x0000	0x82B0

For example: 3A 10 01 00 00 01 00 00 82 B0

Module response for correct data receiving

Header	Device Code	Function Code	Data	Check
0x3A	0x10	0x01	D (1byte data)	CRC16

Addendum: Sensor type code (Decimal)

0,1: Not define 2: CO 3: O2 4: H2 5: CH4 6: None 7: CO2 8: O3 9: H2S 10: SO2
11: NH3 12: CL2 13: ETO 14: HCL 15: PH3 16: None 17: HCN 18: None 19: HF 20: None
21: NO 22: NO2 23: NOX 24: CLO2 25: None 26: None 27: None 28: None 29: None 30: None
31: THT 32: C2H2 33: C2H4 34: CH2O 35: None 36: None 37: None 38: None 39: CH3SH 40: C2H3CL

For example: 3A 10 01 0F 4C AD (HEX 0F = DEC 15, so the sensor is PH3 sensor)

3.2 Sensor data reading (unit: μg/m³)

Request from host device

Header	Device Code	Function Code	Starting Address	Data Length	Data	Check
0x3A	0x10	0x03	0x0000	0x02	0x0000	0x7352

For example: 3A 10 03 00 00 02 00 00 73 52

Module response for correct data receiving

Header	Device Code	Function Code	Starting Address	Data Length	Data	Check
0x3A	0x10	0x03	0x0000	0x02	D	CRC16

D: Received data, 4Byte, Big Endian

For example: 3A 10 03 00 00 02 00 00 00 5E 25 35 Sensor value (μg/m³): 00 00 00 5E i.e. 94μg/m³

3.3 Sensor data reading (ppb)

Request from host device

Header	Device Code	Function Code	Starting Address	Data Length	Data	Check
0x3A	0x10	0x03	0x0002	0x02	0x0000	0x72EA

For example: 3A 10 03 00 02 02 00 00 72 EA

Module response for correct data receiving

Header	Device Code	Function Code	Starting Address	Data Length	Data	Check
0x3A	0x10	0x03	0x0002	0x02	D	CRC16

D: Received data, 4Byte, Big Endian

For example: 3A 10 03 00 02 02 00 00 00 4C A4 DA Sensor value (ppb): 00 00 00 4C i.e. 76ppb

Note: The display accuracy is 1 ppb, and the specific accuracy varies according to different sensors.

3.4 Sensor temperature data reading (°C)

Request from host device

Header	Device Code	Function Code	Starting Address	Data Length	Data	Check
0x3A	0x10	0x03	0x0004	0x01	0x0000	0x8262

For example: 3A 10 03 00 04 01 00 00 82 62

Module response for correct data receiving

Header	Device Code	Function Code	Starting Address	Data Length	Data	Check
0x3A	0x10	0x03	0x0004	0x01	D	CRC16

D: Received data, 2Byte, Big Endian and divided by 100 to get the temperature value

For example: 3A 10 03 00 04 01 0A 3D 45 13 (D = 0x0A3D = 2621 to get the temperature of 26.21°C)

3.5 Sensor humidity data reading (%RH)

Request from host device

Header	Device Code	Function Code	Starting Address	Data Length	Data	Check
0x3A	0x10	0x03	0x0005	0x01	0x0000	0x839E

For example: 3A 10 03 00 05 01 00 00 83 9E

Module response for correct data receiving

Header	Device Code	Function Code	Starting Address	Data Length	Data	Check
0x3A	0x10	0x03	0x0005	0x01	D	CRC16

D: Received data, 2Byte, Big Endian and divided by 10,000 to get the percentage humidity value

For example: 3A 10 03 00 05 01 14 89 4D 38 (0x14 89 = 5257 to get the humidity of 52.57%RH)

3.6 Multiple parameters reading (address 0000 ~ 0005)

Request from host device

Header	Device Code	Function Code	Starting Address	Data Length	Data	Check
0x3A	0x10	0x03	0x0000	0x06	0x0000	0x3293

For example: 3A 10 03 00 00 06 00 00 32 93

Module response for correct data receiving

Header	Device Code	Function Code	Starting Address	Data Length	Data	Check
0x3A	0x10	0x03	0x0000	0x06	D	CRC16

D: Received data, 12Byte

Followed by (MSB first): sensor reading μg/m³ 4Bytes; Sensor reading ppb 4Bytes; Temperature 2Bytes; Humidity 2Bytes.

For example: 3A 10 03 00 00 06 00 00 00 8F 00 00 00 50 0A 70 16 11 35 96

Sensor value (μg/m³): 00 00 00 8F; Sensor value (ppb): 00 00 00 50; Temperature: 0A 70; Humidity: 16 11

3.7 Check error response

Header	Device Code	Function Code	Data	Check
0x3A	0x10	0x08	0x00	CRC16

For example: 3A 10 08 00 0A F9

3.8 Zero Calibration

Request from host device

Header	Device Code	Function Code	Starting Address	Data Length	Data	Check
0x3A	0x10	0x07	0x0000	0x01	0x0000	0x82D6

For example: 3A 10 07 00 00 01 00 00 82 D6

Module response for correct data receiving

Header	Device Code	Function Code	Starting Address	Data Length	Data	Check
0x3A	0x10	0x07	0x0000	0x01	D	CRC16

D: 2Byte data

For example: 3A 10 07 00 00 01 04 7A 01 F5

Caution: Please place the module in the pure air environment stabilizing for at least 5 minutes then send the zero calibration command.

3.9 Gas Calibration

Request from host device

Header	Device Code	Function Code	Starting Address	Data Length	Data	Check
0x3A	0x10	0x09	0x0000	0x01	D	0x82D6

D: 2Byte gas concentration data, Big Endian, Unit: ppm,

For example: 3A 10 09 00 00 01 00 0A 03 FF i.e.: D=0x000A 10ppm gas is used for calibration

Module response for correct data receiving

Header	Device Code	Function Code	Data	Check
0x3A	0x10	0x09	0x00 (Success) 0x01 (Processing) 0x02 (Fail)	CRC16

For example: 3A 10 09 01 CA A9 (Calibration processing)

Caution: The calibration process for environmental detection is about 300 seconds, and for industry usage is about 60 seconds, please wait for the module to respond before starting the command.

• I²C Communication Protocol

1. I²C Interface

Parameter	Definition	State	Min	Max	Unit
f_{ck}	I²C clock frequency	Slave Mode		100	kHz
t_{su}	Data input setup time	Slave Mode	6.5		ns
t_h	Data input holding time	Slave Mode	15.5		ns

2. Slave Device Address

Slave device addresses can be customized by software tools
Default setting:

CO	0	0	0	0	0	0	1	R/W
O3	0	0	0	0	1	0	0	R/W
SO2	0	0	0	0	1	0	1	R/W
NO2	0	0	0	1	0	1	1	R/W

The R/W bit is also used as a common data bit. When reading/writing, use 1 or 0 perform 'OR' operation with original data (read as 1, write as 0).
See the figure below for details.

I²C Address Definition

CO: 0x02,	CLO2: 0x18,	PH3: 0x14,
H2: 0x04,	C2H2: 0x20,	HCN: 0x1A,
O3: 0x08,	CH2O: 0x22,	HF: 0x1C,
SO2: 0x0A,	C2H3CL: 0x28,	NO: 0x1E,
CL2: 0x0C,	H2S: 0x06,	THT: 0x24,
HCL: 0x0E,	NH3: 0x10,	C2H4:0x26,
NO2: 0x16,	ETO: 0x12,	CH3SH: 0x2A

Notice:
For users who received the module before February 5, 2024, please refer to the I2C address provided above and then use AT 191008-7 SMART Module Test software to modify the I2C address and perform I2C communication.
For users who received the module after February 5, 2024, please directly use the I2C address provided above for I2C communication.

3. I²C Communication Protocol

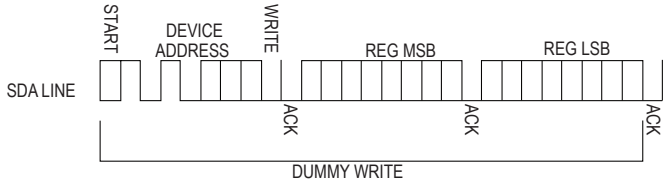

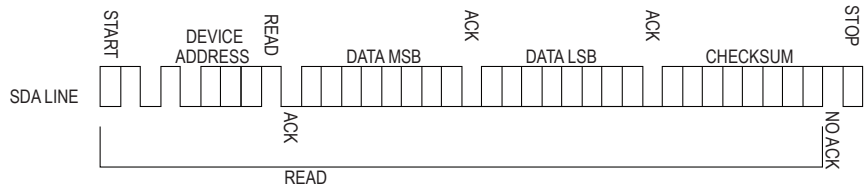

CHECKSUM is cumulative and retrieve check. See Appendix 2 for details.

4. Data Analysis

The REG parameters are shown below, which is the data address in the module.

REG	MSB	LSB
Sensor value (μg/m³)	0x00	0x00
Sensor value (ppb)	0x00	0x02
Temperature (°C)	0x00	0x04
Humidity (%RH)	0x00	0x05

Data examples:

DATA	MSB	LSB	CHECKSUM	Actual Value	Remarks
Sensor value (μg/m³)	0x0000	0x0005	0xFA	5μg/m³	Same with USART Data Conversion Method
Sensor value (ppb)	0x0000	0x0005	0xFA	5ppb	
Temperature (°C)	0x0A	0x3D	0xB8	26.21°C	
Humidity (%RH)	0x14	0x89	0x62	52.57%RH	

Caution: To receive 5Byte data when reading sensor value, and to receive 3Byte data when reading temperature and humidity

• Warning

1) This product does not have any intrinsic safety certification or explosion proof certification. Please do NOT use this product in any hazardous locations.
2) This product does not have reverse power protection and Electrostatic Discharge (ESD) protection. Please carefully verify the electrical polarity and make the ESD protection before each use or installation.
3) Please use a stable DC power supply for this gas sensor module. It is highly recommended to use a power supply with the output voltage fluctuation less than 1%.

Appendix 1: MODBUS CRC16 algorithm

```
unsigned short modbus_CRC16(unsigned  char *ptr, unsigned char len)
{
unsigned short wcrc=0XFFFF; / /
int  i=0, j=0;
for (i=0; i<len; i++)
        {
                wcrc^=*prt++;
                for ( j=0; j<8; j++)
                    {
                        if (wcrc&0X0001)
                          {
                              wcrc=wcrc>>1^0XA001;
                           }
                        else
                          {
                              wcrc>>=1;
                           }
                    }
          }
return wcrc<<8| wcrc>>8;   //little endian (LSB fist)

}
```

In CRC calculation, only 8 data bits, start bit and stop bit are used. If there are parity bit, including this bit, they are not involved in CRC calculation.

The CRC calculation method:

1. Load a 16 bit register with the value of 0 xffff, which is CRC register.
2. The XOR of the first 8-bit binary data (the first byte of communication information frame) and the 16 bit CRC register is still stored in the CRC register.
3. Move the contents of CRC register one bit to the right, fill the highest bit with 0, and detect whether the moved out bit is 0 or 1.
4. If the move out bit is zero, repeat the third step (move one bit to the right again); If the shift out bit is 1, the CRC register XORs with 0xa001.
5. Repeat steps 3 and 4 until the right shift is 8 times, so that the entire 8-bit data is processed.
6. Repeat steps 2 and 5 to process the next byte of the communication information frame
7. After all the bytes of the communication information frame are calculated according to the above steps, the high and low bytes of the 16 bit CRC register are exchanged
8. Finally, the content of CRC register is CRC check code.
9. For example, a command 3A 10 09 00 00 01 00 32 get the wcrc value of 02 2D through the above program. In this way, we get the calibration command: 3A 10 09 00 00 01 00 32 02 2D.

Appendix 2: CHECKSUM Accumulation and Verification

```
unsigned char CheckSum(unsigned  char *buf, unsigned char len)  //return CheckSum value
{
      unit8_t  i, ret = 0;

     for (i=0; i<len; i++)
          {
                ret +=*(buf++);
           }
                 ret = ~ret;
                 return ret;
 }
```

The check sum method:

Sender: accumulate the data to get a sum, and reverse the sum to get our check value. Then send the data with the check value to the receiver.

For example:

Sender: to send 0xA8 and 0x50, we use the unsigned char (8 bits) to save the accumulated sum, i.e. 0xf8 (0b11111000), and get the check sum of 0x07 (0b00000111). Then send these three data out.